Sísísí Cónicas Planas

Gabriel Ordeig Cole. 1987
Pendant lamps

SANTA & COLE

Canopies (European version)

Canopy: nikel
Cable: black

Canopy: white
Cable: white

Canopy: white
Cable: black

Canopy: black
Cable: black

MT4

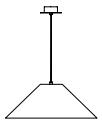

A

MT5

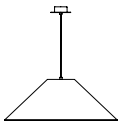

B

Canopies (American version)

Canopy: nikel
Cable: black

Canopy: white
Cable: white

Canopy: white
Cable: black

Canopy: black
Cable: black

Lampshades:

Stitched beige parchment

White parchment

The flat conical shape of the MT4 and MT5 lampshades have a familiar, archetypal silhouette. Its volume may be robust but it is light in its adaptability to the space.
Designed by Gabriel Ordeig in 1987 as a vindication of cardboard and its warm translucence, this shade is an invitation to make the most of table talks. The two options of titched cardboard, in beige or white, allow for harmonious oexistence between object and user.

General description:
Stitched beige parchment or white parchment lampshade with lower visor to avoid glare.
Circular metallic canopy satin nikel or textured white, black finished for a simple lamp socket.
Suitable for side entry adaptor.
Electric cable length: 3 m / 118.1''
Junction Box adaptor included Ø 11,7 cm / 4.6" (American version).

Approximate weight (unpacked):
(A) Sísísí Cónicas Planas MT4: 0,5 kg / 1.1 lb
(B) Sísísí Cónicas Planas MT5: 0,7 kg / 1.5 lb

Technical information:
Recommended light source (not included):

(A) LED bulb: 4,8 W / 470 lm / 2700 K
E27 - E26 / Max. hgt. 105 mm / 4.1"

(B) LED bulb: 11 W / 1.521 lm / 2700 K
E27 - E26 / Max. hgt. 155 mm / 6.1"

(A, B)
Suitable only for indoor use.
Always use the light source recommended or equivalent.

Input voltage: 110, 120, 130 Vac.
(50 Hz / 60 Hz). According to destination.

Regulations:

European version
UNE-EN 60598
UNE-EN 55015
UNE-EN 60529

American version
Dry location only
UL-1598
E-336377

Maintenance:
Clean with a smooth cloth. Do not use ammonia, solvents or abrasive cleaning products.

Others:
The lamp is delivered in one package.
The assembly instructions are delivered with the product.

Model A: Sísísí Cónicas Planas MT4 (European version)

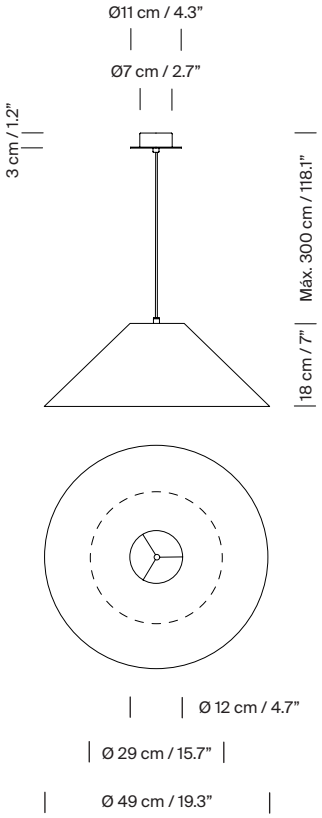

Model B: Sísísí Cónicas Planas MT5 (European version)

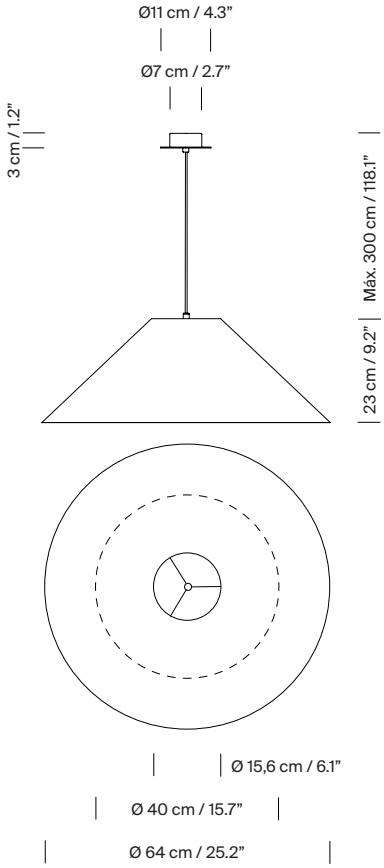

Model A: Sísísí Cónicas Planas MT4 (American version)

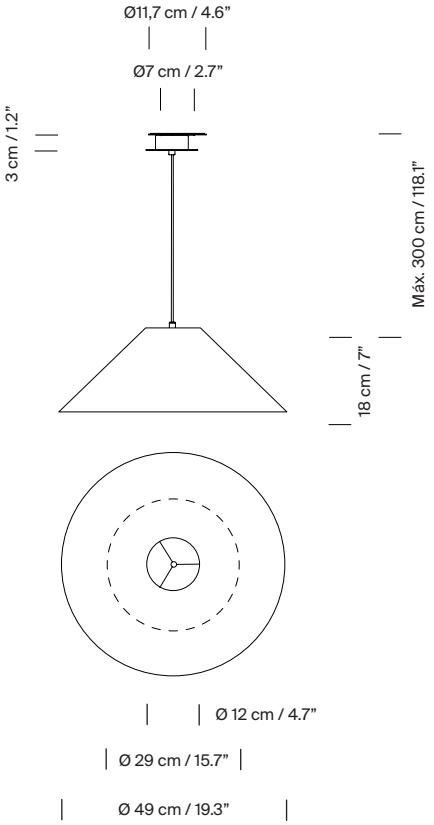

Model B: Sísísí Cónicas Planas MT5 (American version)

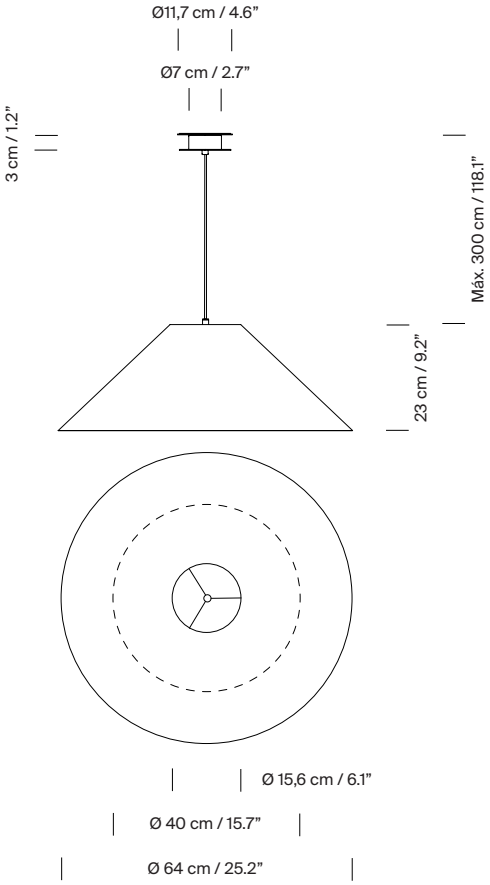

Collection:

Table lamps

Básica

Pendant lamps

Sísísí Cónicas Planas

Sísísí Cilíndricas

Sísísí Cónicas

Sísísí Cónicas Largas